The power of unused energy
enocean

RF Receiver Modules
RCM 110 and RCM 120

User Manual V1.93
April 2007

Revision History

The following major modifications and improvements have been made to the initial version of the document (RCM 110/120 User Manual V1.0):

Version	Subject (major changes since last version)
V1.1	No major changes
V1.2	Chapter 4 added "Development Tools"
V1.3	Chapter 2.10: Adjustment of RSSI output characteristics
V1.4	Chapter 3.8: Watchdog application note added for RCM 120 operating mode 1
V1.5	Chapter 2.3: Error in output naming of RCM110 Modus 5 corrected (Out_0 and Out_1 are active in this mode, not Out_0 and Out_2)
V1.6	• Chapter 2.4: Application note added for teach-in function of Serial Interface • Chapter 2.5.3: Note added for H_SEQ, that RID is checked additionally for known/unknown decision • Revision of chapter 3.2 "Antenna Mounting" • Revision of chapter 3.9 "Approval Requirements" • Supplementation of chapter 5 "Declaration of Conformity"
V1.7	• Chapter 2.5.5: Application note added for systems using a radio repeater • Chapter 3.7: Note added for the realization of a physical RS232 interface
V1.8	• Chapter 2.5: Timing diagram complemented for serial mode • Chapter 2.5.6: Field BUTTONS defined for PTM200 • Chapter 3.3: Transmission range described in more detail • Chapter 3.10: FCC/IC Approval Requirements added • Chapter 4.1: US version of Evaluation Kit added
V1.9	• Current consumption and supply voltage range corrected
V1.91	• Serial telegram timing corrected
V1.92	• Application note added: RCM open collector outputs and how to connect them; power supply requirements modified
V1.93	• H_SEQ information in 2.5.3 clarified; antenna drawing corrected

Published by EnOcean GmbH, Kolpingring 18a, 82041 Oberhaching, Germany
www.enocean.com, info@enocean.com, phone ++49 (89) 6734 6890
© EnOcean GmbH, All Rights Reserved

Important!

This information describes the type of component and shall not be considered as assured characteristics. No responsibility is assumed for possible omissions or inaccuracies. Circuitry and specifications are subject to change without notice. For the latest product specifications, refer to the EnOcean website: http://www.enocean.com.

As far as patents or other rights of third parties are concerned, liability is only assumed for modules, not for the described applications, processes and circuits.

EnOcean does not assume responsibility for use of modules described and limits its liability to the replacement of modules determined to be defective due to workmanship. Devices or systems containing RF components must meet the essential requirements of the local legal authorities. The approval requirements described in this document are of best knowledge without any warranty.

The modules must not be used in any relation with equipment that supports, directly or indirectly, human health or life or with applications that can result in danger for people, animals or real value.

Components of the modules are considered and should be disposed of as hazardous waste. Local government regulations are to be observed.

Packing: Please use the recycling operators known to you. By agreement we will take packing material back if it is sorted. You must bear the costs of transport. For packing material that is returned to us unsorted or that we are not obliged to accept, we shall have to invoice you for any costs incurred.

Table of Contents

1. GENERAL DESCRIPTION 4

1.1 Basic Functionalities 4

1.2 Typical Applications 5

1.3 Features Overview 5

1.4 Physical Dimensions 5

1.5 Environmental Conditions 6

1.6 Ordering Information 6

2. FUNCTIONAL DESCRIPTION 7

2.1 Block Diagram 7

2.2 Pin Description 7

2.3 RCM 110 Operating Modes 10

2.4 RCM 120 Operating Modes 12

2.5 RCM 120 Serial Interface (Operating Mode 0) 15

2.6 Learning Modes 20

2.7 Learning of Radio Transmitters 20

2.8 Deleting Radio Transmitters 22

2.9 RCM 110 Scene Selection Control 23

2.10 Received Signal Strength Indicator (RSSI) 24

2.11 Demodulated Direct Signal Output (RxD) 24

3. APPLICATIONS INFORMATION 25

3.1 Module Mounting 25

3.2 Antenna Mounting 25

3.3 Transmission Range 27

3.4 Power Supply Requirements 28

3.5 LMI Output Connection 28

3.6 Note to RCM 110 Mode 5 (Dimming) 29

3.7 Notes to RCM 120 Mode 0 (Serial Data Communication) 29

3.8 Time-Out Recommendation concerning RCM 120 Mode 1 (Pushbutton) 29

3.9 CE Approval Requirements 30

3.10 FCC/IC Approval Requirements 30

3.11 Connecting Open Collector Outputs 30

4. DEVELOPMENT TOOLS 32

4.1 Evaluation Kit EVA 100/105 32

4.2 Field Intensity Meter EPM 100 32

5. DECLARATION OF CE CONFORMITY 33

1. GENERAL DESCRIPTION

The multifunctional **receiver modules RCM 110 and RCM 120** are used to receive and to process telegrams generated and transmitted by EnOcean radio transmitters. These modules can be easily integrated into control and switching units for the implementation of different application-specific system solutions.

1.1 Basic Functionalities

For the implementation of different application-specific system solutions the RCM radio modules can be easily integrated into control and switching units by using the functional control outputs ("open collector").

Serial Data Communication via Receiver Module RCM 120 (all EnOcean RF signals):

- Serial data link from all radio signals transmitted from PTM, STM, TCM and CTM radio modules (9600 bps, 1 start bit, 1 stop bit)
- **This interface enables a simple realization of a Gateway to existing control and monitoring systems**
- **This interface enables any desired actor functionality by the user, e.g. by connecting to a following microcontroller (the output control logic can be easily and flexible programmed by the user)**

RCM 110 output switching functionalities (controlled by PTM radio signals):

- Basic signal output functions "switching" (On/Off): 1, 2 or 4 channels
- Basic signal output function "dimming": On/Off (pushbutton operated quickly) and PWM 50 kHz (pushbutton pressed for a longer time) with switch-off value memory
- Scene selection control: ALL On/Off, 6 scene memories
- Learning procedure for EnOcean transmitters, easy to operate

RCM 120 output switching functionalities (controlled by PTM radio signals):

- Basic signal output function "pushbutton": 1 channel
- Basic signal output function "tubular motor control" (UP/DOWN with slat acting): 1 or 2 channel
- Learning procedure for EnOcean transmitters, easy to operate

Figure 1: Receiver modules RCM 110 and RCM 120

1.2 Typical Applications

- **Building installation**
- **Industrial automation**
- **Consumer Electronics**

The RCM modules are part of a powerful RF system solution from EnOcean for operation and control applications. Because the RF transmitters are self-powered (no batteries), maintenance-free RF systems can be implemented.

The RCM modules operate together with the following further EnOcean components: PTM (batteryless radio switches), STM (batteryless radio sensors), CTM (remote control) and TCM (bi-directional IT interface)

1.3 Features Overview

Power Supply: ..... 5 V DC ± 5 %
Current Input: ..... 29 mA max. (without output load)
Receive Frequency: ..... 868.3 MHz (stabilized by crystal PLL)
Sensitivity / Channel Bandwidth: ..... -95 dBm / 280 kHz
Control Inputs: ..... 6 inputs for set up of operating and learning modes
Functional Outputs: ..... 4 outputs, their function depends on the selected operation mode
Learning Mode Output: ..... indicates learning of transmitters
Number of RF transmitters learnable: ..... up to 30 EnOcean transmitters
Note: In serial mode all received EnOcean telegrams are transmitted
RSSI Output: ..... indicates received peak signal strength
Direct Signal Output: ..... physical layer 1 output (120 kbps)

1.4 Physical Dimensions

Antenna: ..... pre-installed 9 cm whip antenna, external 50 Ohm antenna mountable
Dimensions of PCB: ..... 18.0 x 42.0 x 5.5 mm (without wiring pins)
Connector: ..... 16 pins, grid 2.0 mm (4.0 mm in length, ☐ 0.5 mm)

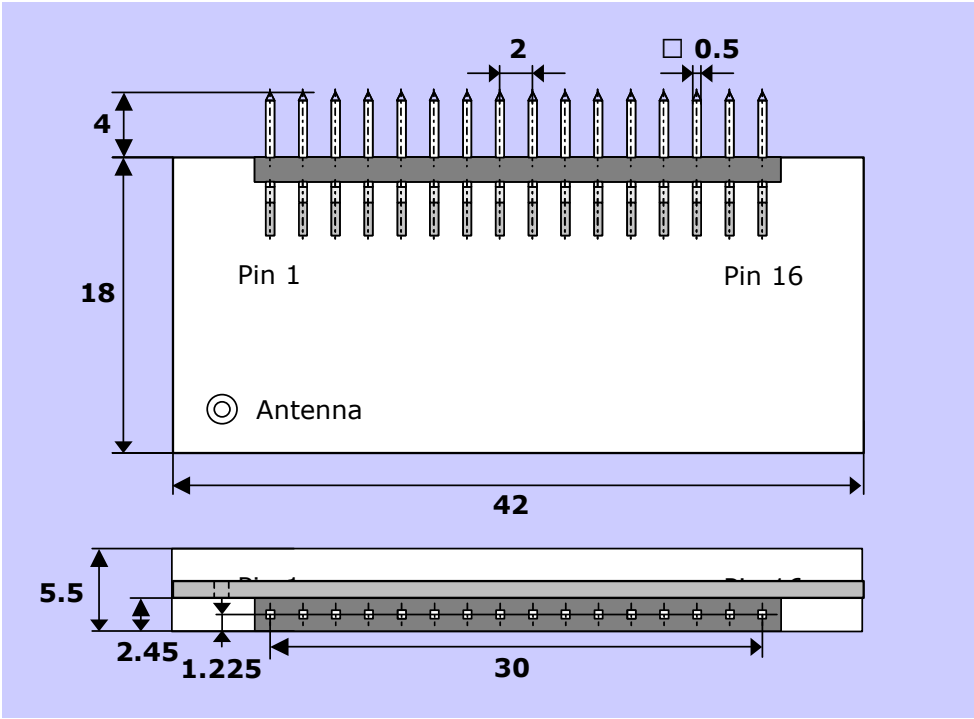

Figure 2: RCM 110 and RCM 120 package outlines

1.5 Environmental Conditions

Operating Temperature:..... -25 up to +65 °C
Storage Temperature: ..... -40 up to +85 °C, +85 up to +100 °C for 1h max.
Humidity:.....0 % to 95 % r.h.

1.6 Ordering Information

Type	EnOcean Ordering Code	Remarks
RCM 110	**S3002-B110**	Switching or Dimming Control
RCM 120	**S3002-B120**	Serial Interface, Tubular Motor or Pushbutton Control

2. FUNCTIONAL DESCRIPTION

2.1 Block Diagram

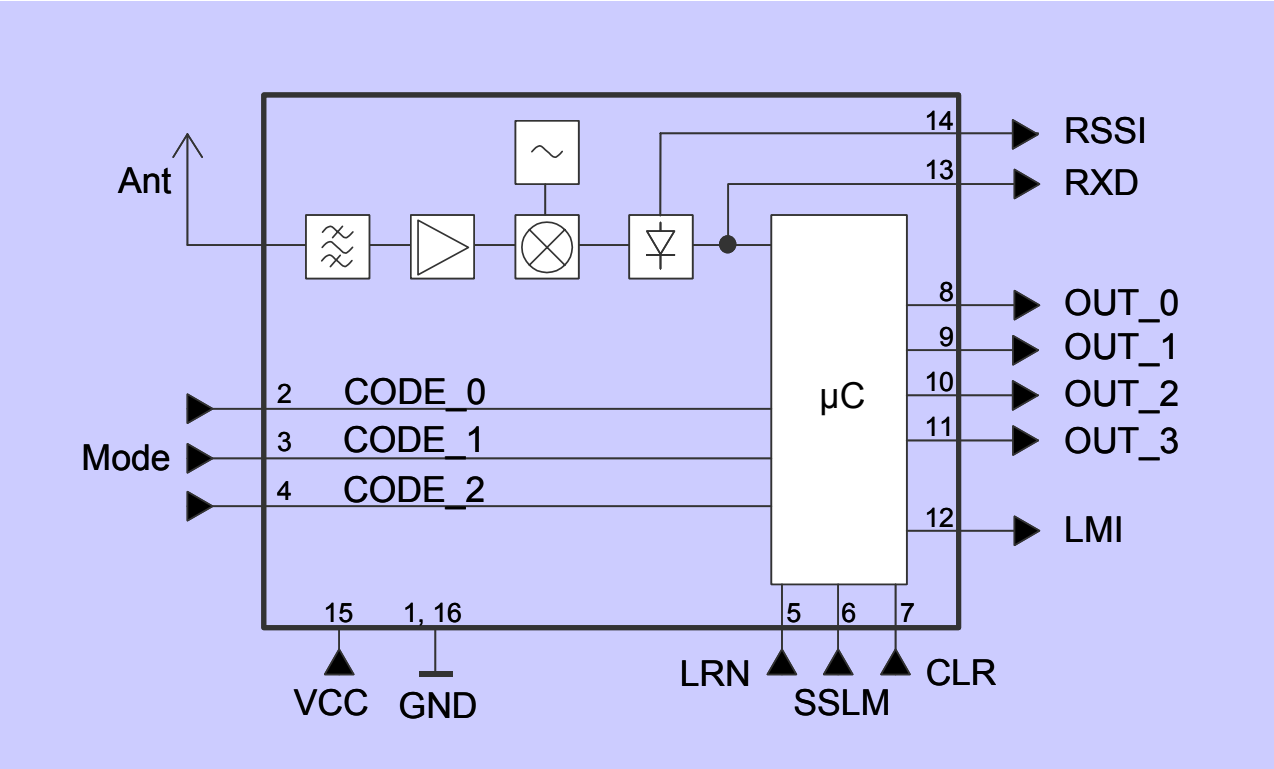

Figure 3: Block diagram of RCM 110 and RCM 120

2.2 Pin Description

Pin No.	Symbol	Function	Operational characteristics
1	**GND_0**	Ground connection	
2 **3** **4**	**CODE_0** **CODE_1** **CODE_2**	Encoding input for operation mode selection (configuration of the receiver firmware). The operation mode is defined at the first power-up in accordance to the pin connecting. A later change of the operation mode is possible at power-up, but only if the ID memory is cleared in addition (connect CLR-pin to GND -> power-down -> change CODE-pin connecting -> power-up).	Resistor network input. Code pins should be left open or connected to GND (for encoding schematics, see 2.3 RCM 110 Operating Modes / 2.4 RCM 120 Operating Modes).

5	**LRN**	Control input to enter and to stop transmitter learning mode: see 2.7 Learning of Radio Transmitters. During transmitter learning mode, the sensitivity of the receiver is reduced to in-room operation.	Resistor network input: Connect the open LRN pin to GND for longer than 0.5 sec.
6	**SSLM**	Control input to enter Scene Switch learning mode: Triggered PTM transmitters are learned as scene call switches. For scene programming the CTM remote control is necessary. See chapters 2.6 up to 2.9 for further details.	Resistor network input: Connect the open SSLM pin to GND for longer than 0.5 sec.
7	**CLR**	Control input to clear the receiver ID and scene memory (all learned switch rockers, sensors and scene switches)	Resistor network input: Connect the open CLR pin to GND for longer than 2 seconds.
8 **9** **10** **11**	**OUT_0** **OUT_1** **OUT_2** **OUT_3**	Functional control outputs (see 2.3 RCM 110 Operating Modes / 2.4 RCM 120 Operating Modes). Also indicate current learning mode status (see 2.7 Learning of Radio Transmitters).	Open collector outputs. 35 V max., 100 mA max., 100 mW max. each.
12	**LMI**	Learning Mode indication output: LMI is Active High in the learning mode phase. For optical indication, LEDs can be connected with one lead directly to the functional control outputs. The other lead of the LEDs can be connected to the LMI pin in common, so Learning Mode LEDs are switched off in operation mode. If desired, the LMI pin can also be used to switch off loads within learning mode (in addition see Application Note chapter 3.5).	5 V TTL output, 20 mA max.
13	**RXD**	Digital direct output of all received radio bit streams (physical layer 1, 120 kbps). Note: RCM 120 in Operating Mode 0 offers at OUT_0 a 9.6 kbps standardized serial data output (see chapter 2.5) which is very good suited for a further data processing by the user.	5 V TTL output, source impedance 11 KΩ
14	**RSSI**	Indication output of received signal strength (peak detection)	Source impedance app. 20 KΩ
15	**VCC**	Power supply	5 V DC ± 5%, 29 mA max. (without LMI output current)
16	**GND_1**	Ground connection	

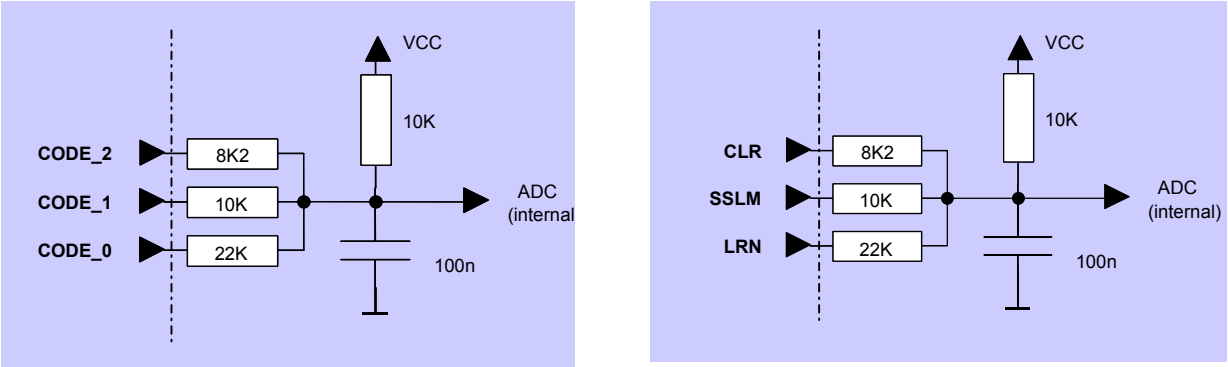

Figure 4: Equivalent schematics of Control Inputs (pins 2 to 7)

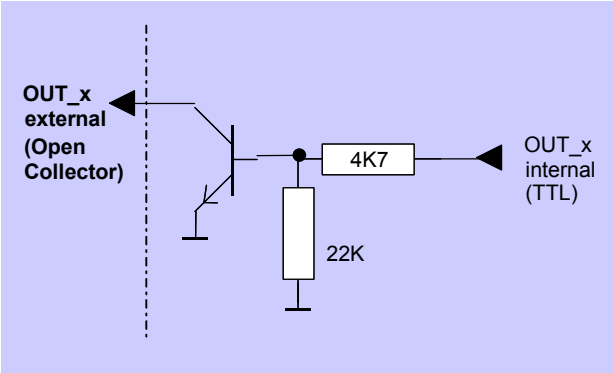

Figure 5: Equivalent schematics of Functional Outputs (pins 8 to 11)

2.3 RCM 110 Operating Modes

The following operating modes can be configured by the encoding inputs CODE_2..0 of the RCM 110 module:

Mode	Function	Output signal description	No. of channels	CODE _2	CODE _1	CODE _0
0	**None**			NC	NC	NC
1	**None**			NC	NC	GND
2	**Rocker Switch - 1 channel**	Supplies the desired logic switching state "on/off" at OUT_0 when pushing the switch rockers	1 (OUT_0)	NC	GND	NC
3	**Rocker Switch - 2 channels**	Same as Mode 2 but operation of 2 receiver channels (OUT_0 and OUT_1)	2 (OUT_0..1)	NC	GND	GND
4	**Rocker Switch - 4 channels**	Same as Mode 2 but operation of 4 receiver channels (OUT_0, OUT_1, OUT_2 and OUT_3)	4 (OUT_0..3)	GND	NC	NC
5	**Dimming**	OUT_0 is 50 kHz PWM • I-button pressed for shorter than Ts ~ 0.5 sec.: ON (Tv = actual dimming value at switching off). • O-button pressed for shorter than Ts ~ 0.5 sec.: OFF (Tv = 0%) • O-/I-button pressed longer than Ts ~ 0.5 sec.: Duty cycle variation from min. on-value of Tv = 10%*) up to max. on-value of Tv = 100% (O=less, I=more). OUT_1 is active as long as Tv is not 0% (logic on)*)	1 (OUT_0, OUT_1)	GND	NC	GND
6	**None**					
7	**Test**	Reserved (module test mode)		GND	GND	GND

The operation mode is defined with pin status at power-up; a change of operation mode is possible with cleared ID memory only.

<u>Note:</u> Since all RCM 110 operating modes are switching functions, transmitter modules with switching functionality can be learned only (RPS and HRC radio telegrams from PTM, CTM or TCM modules). 1BS or 4BS telegrams from e.g. STM modules can not be learned.

<u>*) Notice</u>! RCM 110 modules labeled with development step code "DA", the min. value of Tv is 20% and OUT_1 switching function is not implemented.

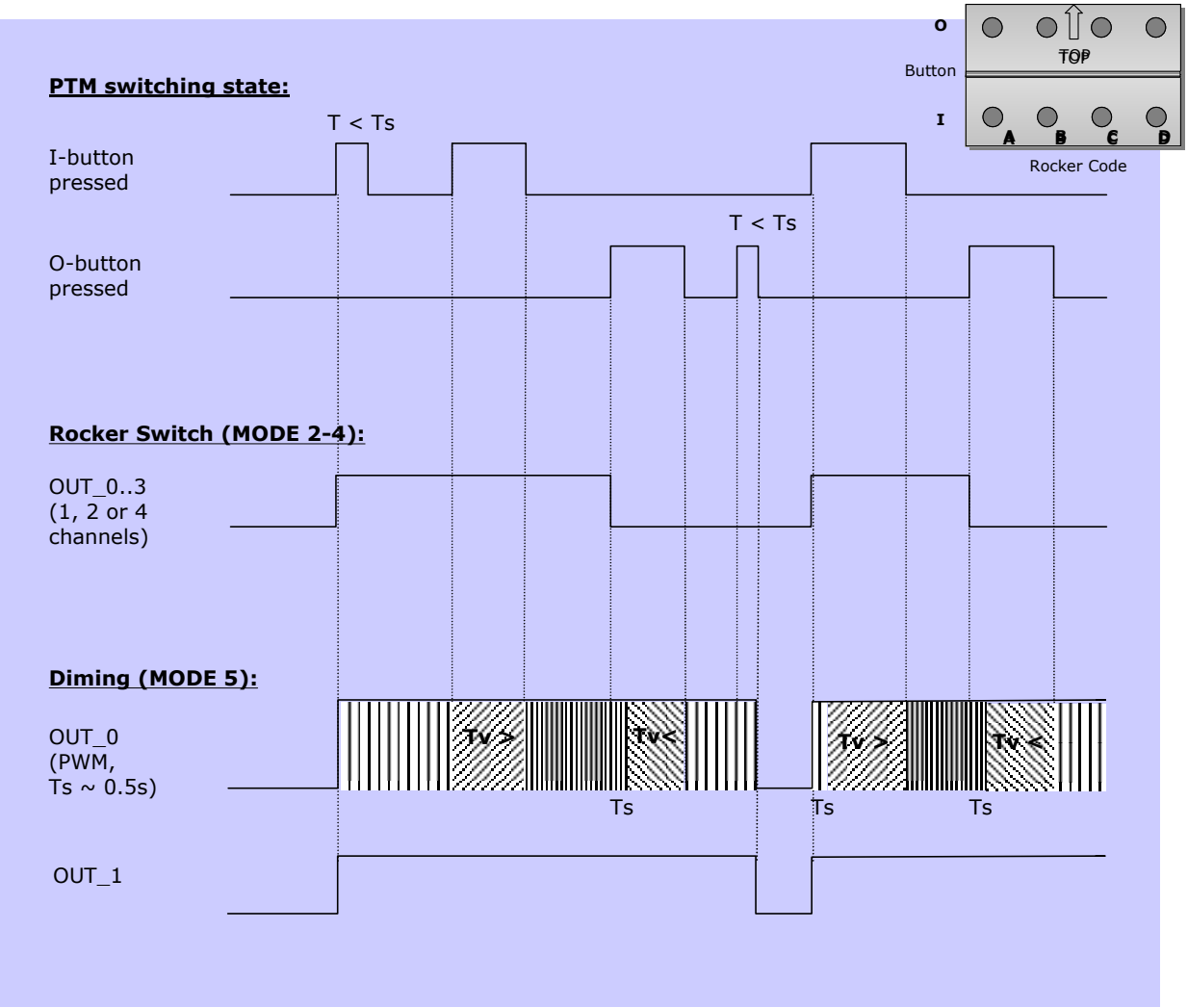

Figure 6: Timing of RCM 110 functional outputs

2.4 RCM 120 Operating Modes

The following operating modes can be configured by the encoding inputs CODE_2..0 of the RCM 120 module:

Mode	Function	Output signal description	No. of channels	CODE _2	CODE _1	CODE _0
0	**Serial Interface**	OUT_0: Asynchronous Interface, supplies standard data blocks of information from all received EnOcean radio telegrams (9600 bps; 8 data bits, no parity bit, one start bit, one stop bit). For further information see chapter 2.5 OUT_1: Learning mode status indicator	1 (OUT_0..1)	NC	NC	NC
1	**Push Button**	One-to-one copy of pushbutton actions "O-button pressed/released" at OUT_0 and "I-button pressed /released" at OUT_1	1 (OUT_0..1)	NC	NC	GND
2	**Tubular Motor Control - 2 channel**	Same as Mode 6 but operation of 2 receiver channels: - channel 1 at OUT_0 and OUT_1 - channel 2 at OUT_2 and OUT_3	2 (OUT 0-1, OUT 2-3)	NC	GND	NC
3	**None**			NC	GND	GND
4	**None**			GND	NC	NC
5	**None**			GND	NC	GND
6	**Tubular Motor Control - 1 channel**	- Control signals - "Open/Up" at OUT_0 and - "Close/Dn" at OUT_1 with slat acting function (rocker pushed not longer than Ts ~ 0.75 sec.). - Continuous shutter running for 2 min is started when the rocker is pushed longer than Ts sec. - Switchover time at changing the driving direction is Ts ~ 0.75 sec.	1 (OUT 0-1)	GND	GND	NC
7	**Test**	Reserved (module test mode)		GND	GND	GND

The operation mode is defined with pin status at power-up; a change of operation mode is possible with cleared ID memory only.

<u>Note:</u> Since RCM 120 operating modes 1,2 and 6 are switching functions, transmitter modules with switching functionality can be learned in these modes only (RPS and

HRC radio telegrams from PTM, CTM or TCM modules).

<u>Note:</u> Mode 0 (Serial Interface) provides an optional to use, simple teach-in functionality for PTM, STM, CTM and TCM modules:

During the receiver is in learn phase the IDs of all arriving transmitter telegrams are stored. All received EnOcean telegrams are outputted at the serial interface in Learn Mode and in Operating Mode. Those with known ID are marked in addition by a dedicated Bit (see H_SEQ at chapter 2.5).

Please note, that cyclic sending transmitters can be learned inadvertently, especially when using more than one sensor! For further application information please draw attention to the STM 100 User Manual, chapter 3.8 „Learn Pushbutton".

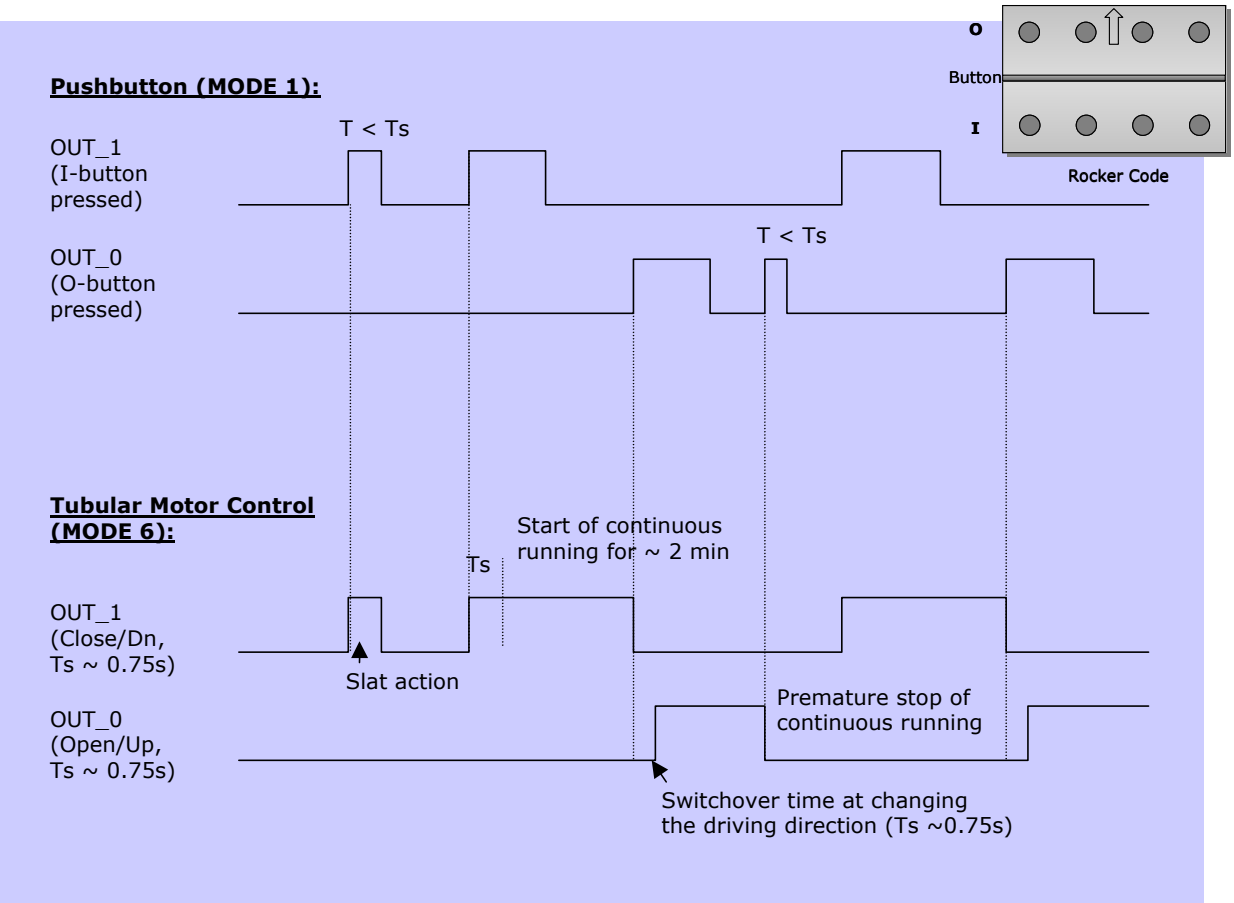

Figure 7: Timing of RCM 120 functional outputs

RCM 120 MODE 6	O-button pressed < Ts sec.	I-button pressed < Ts sec.	O-button pressed ≥ Ts sec.	I-button pressed ≥ Ts sec.
OUT_0 and OUT_1 are inactive (standstill)	OUT_0 active for pressed time (slat acting)	OUT_1 active for pressed time (slat acting)	OUT_0 active for 2 min. (cont. running)	OUT_1 active for 2 min. (cont. running)
OUT_0 is active (open/up)	At O-button releasing time OUT_0 changes to inactive (stop at button release)	At I-button pressing time OUT_0 changes to inactive (stop immediately)	OUT_0 remains active (driving on)	At pressing time OUT_0 changes to inactive immediately. After Ts sec OUT_1 changes to active for 2 min. (cont. running after switchover time)
OUT_1 is active (close/dn)	At O-button pressing time OUT_1 changes to inactive (stop immediately)	At I-button releasing time OUT_1 changes to inactive (stop at button release)	At pressing time OUT_1 changes to inactive immediately. After Ts sec OUT_0 changes to active for 2 min. (cont. running after switchover time)	OUT_1 remains active (driving on)

2.5 RCM 120 Serial Interface (Operating Mode 0)

When the receiver is in "Serial Interface" mode, it transfers out data blocks of information from the received RF telegrams. **All received EnOcean telegrams are transferred.** Telegrams of transmitters learned by the receiver are signed if this procedure is used. The data block format is explained later in this document; it depends on the type of sensor from which the telegram has been received.

The serial telegram is sent 40 ms after reception of the first of typically three radio sub-telegrams. While transmitting data through the serial interface (about 15ms) the module is not able to receive radio telegrams. Sub-telegrams received from one transmitter with same content within 40 ms are treated as one telegram (only one serial transmission). There is a buffer for 4 telegrams. A buffer is blocked for 40 ms after reception of the first sub-telegram. If more than 4 different telegrams (repeated telegrams are also treated as different telegrams in RCM120) are received within 40 ms further telegrams will be ignored until a free buffer is available.

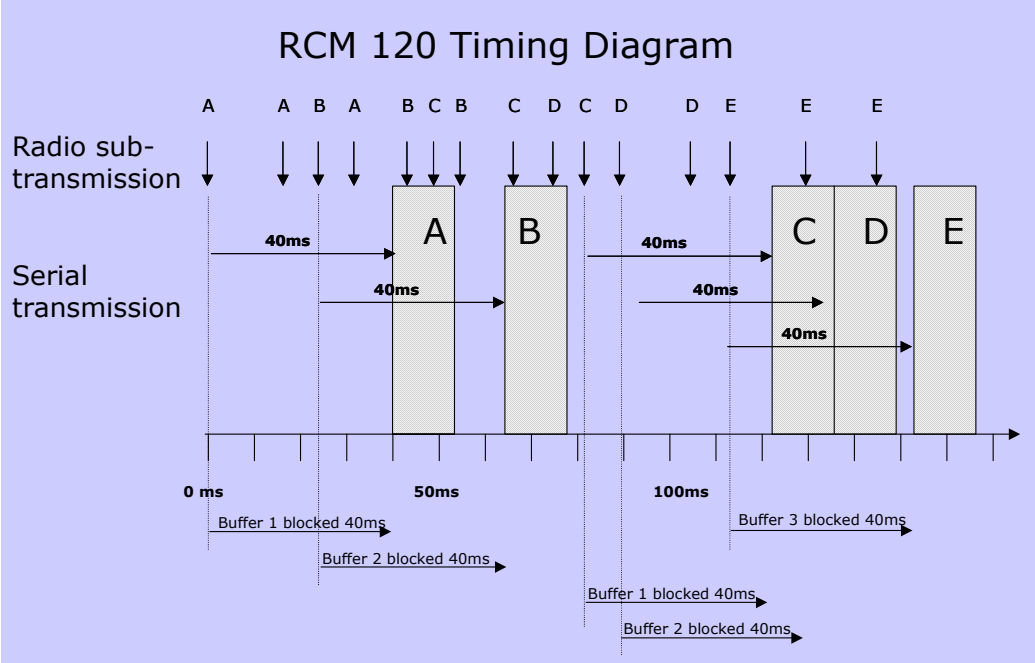

Figure 8: Timing diagram for serial mode

2.5.1 Message format

The following figure shows the message format. A data block of length n is composed of 2 synchronization bytes, 1 octet for the header and n-1 octets for the message data.

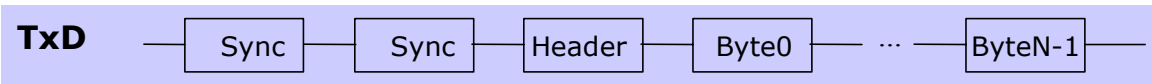

Figure 9: Message format for asynchronous serial communication

2.5.2 Octet signals and bit order

- **9600 bps; 8 data bits, no parity bit, one start bit, one stop bit**
- Line idle is binary 1 (standard)
- Each character has one start bit (binary 0), 8 information bits (least significant bit first) and one stop bit (binary 1)

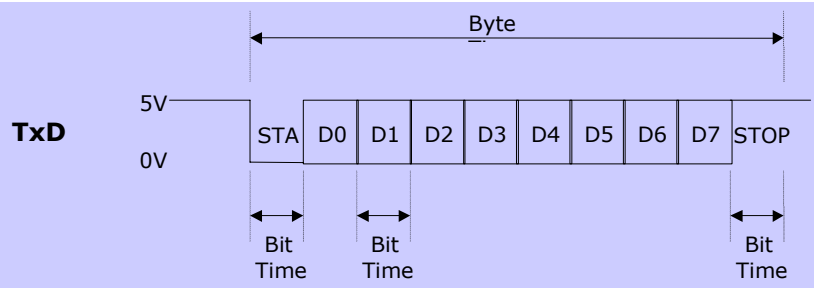

Figure 9a: Signals and bit order sending a byte

2.5.3 Description of serial data structure

Bit 7	**Bit 0**
SYNC_BYTE1 (A5 Hex)	
SYNC_BYTE0 (5A Hex)	
H_SEQ	**LENGTH**
ORG	
DATA_BYTE3	
DATA_BYTE2	
DATA_BYTE1	
DATA_BYTE0	
ID_BYTE3	
ID_BYTE2	
ID_BYTE1	
ID_BYTE0	
STATUS	
CHECKSUM	

SYNC_BYTE 0..1	(8 bit each)	Synchronization Bytes
H_SEQ	(3 bit)	Header identification: 0 dec for unknown transmitter ID received (not sent in LRN-Mode!) 1 dec for known transmitter ID received (not sent in LRN-Mode!) 2 dec for new transmitter learned (sent in LRN-Mode only!) If a switch telegramm is received (RPS or HRC), the rocker code (RID) is checked in addition to decide the ID is known
LENGTH	(5 bit)	Number of octets following the header octet (11 dec)
ORG	(8 bit)	Type of telegram (see detail description)
DATA_BYTE 0..3	(8 bit each)	Data bytes 0..3 (see detail description)
ID_BYTE 0..3	(8 bit each)	32-bit transmitter ID
STATUS	(8 bit)	Status field (see detail description)
CHECKSUM	(8 bit)	Checksum (Last LSB from addition of all octets except

sync bytes and checksum)

2.5.4 Detailed description of ORG field

ORG field value (decimal)	Acro-nym	Description
5	**RPS**	Telegram from a PTM switch module received (e.g. PTM 100 or PTM 200)
6	**1BS**	1 byte data telegram from a STM sensor module (e.g. STM 250)
7	**4BS**	4 byte data telegram from a STM sensor module (e.g. STM 100)
8	**HRC**	Telegram from a CTM module received
0-4, 9-255	**-**	Reserved

2.5.5 Detailed description of STATUS field

If ORG = 5 (Telegram from a PTM switch module):

7			**0**
Reserved	**T21**	**NU**	**RP_COUNTER**

Reserved	(2 bit)	For future use
T21	(1 bit)	T21=0 → PTM switch module of type 1, T21=1 → PTM switch module of type 2
NU	(1 bit)	NU=1 → N-message, NU=0 → U-message.
RP_COUNTER	(4 bit) =0..15	Repeater level: 0 is original message (not repeated)

<u>IMPORTANT NOTE FOR SYSTEMS USING AN ENOCEAN RADIO REPEATER:</u>

Within toggle switch applications using the RCM 120 or TCM 120 serial receiver mode in combination with the TCM 110 repeater module, please ensure that no serial command interpretation error may occur at the connected control unit. A toggle signal means that the same telegram (from e.g. PTM 100, PTM 200 or STM 100) is sent for switching something on and off. If e.g. the light is switched on by means of a RCM 120 receiving the I-button telegram from a PTM 100, the repeated telegram (delay <100ms) may switch off the light again. It is therefore mandatory to interpret the RP_COUNTER field as described in the RCM 120 User Manual. If a repeated telegram (RP_COUNTER>0) is received it has to be verified if the same telegram with a lower RP_COUNTER state has already been received in the previous 100 ms. In this case the repeated message has to be discarded.

<u>PTM switch modules of Type 1 (e.g. PTM 100)</u> do not support interpretation of operating more than one rocker at the same time:

- N-message received → Only one pushbutton was pressed.
- U-message received → No pushbutton was pressed when activating the energy generator, or more than one pushbutton was pressed.

<u>PTM switch modules of Type 2 (e.g. PTM 200)</u> allow interpretation of operating two buttons simultaneously:

- N-message received → Only one or two pushbuttons have been pressed.
- U-message received → No pushbutton was pressed when activating the energy generator, or more than two pushbuttons have been pressed.

Note for telegrams from PTM transmitters: Due to the mechanical hysteresis of the energy bow, in most rocker switch device implementations, pressing the rocker sends an N-message and releasing the rocker sends a U-message!

If ORG = 6, 7 or 8 (all other telegrams):

7	0
Reserved	**RP_COUNTER**

Reserved	(4 bit)	For future use
RP_COUNTER	(4 bit)	Repeater level: 0 is original message (not repeated)

Please consider the "IMPORTANT NOTE" above!

2.5.6 Detailed description of DATA_BYTE 3..0 fields

If ORG = 5 and NU = 1 (N-message from a PTM switch module):

DATA_BYTE2..0 always = 0
DATA_BYTE3 as follows:

7					0
RID	**UD**	**PR**	**SRID**	**SUD**	**SA**

RID	(2 bit)	Rocker ID, from left (A) to right (D): 0, 1, 2 and 3 (decimal)
UD	(1 bit)	UD=1 → O-button, UD=0 → I-button
PR	(1 bit)	PR=1 → Energy bow pressed, PR=0 → Energy bow released
SRID	(2 bit)	Second Rocker ID, from left to right: 0, 1, 2 and 3
SUD	(1 bit)	(Second) SUD=1 → O-button, SUD=0 → I-button
SA	(1 bit)	SA=1 → Second action (2 buttons pressed simultaneously), SA=0 → No second action

If ORG = 5 and NU = 0 (U-message from a PTM switch module):

DATA_BYTE2..0 always = 0
DATA_BYTE3 as follows:

7		0
BUTTONS	**PR**	**Reserved**

BUTTONS (3 bit) Number of simultaneously pressed buttons, as following:

PTM 100 (Type1):	PTM200 (Type2):
0 = 0 Buttons	0 = 0 Button
1 = 2 Buttons	1 = not possible
2 = 3 Buttons	2 = not possible
3 = 4 Buttons	3 = 3 or 4 buttons
4 = 5 Buttons	4 = not possible
5 = 6 Buttons	5 = not possible
6 = 7 Buttons	6 = not possible
7 = 8 Buttons	7 = not possible

PR	(1 bit)	PR = 1 → Energy bow pressed, PR = 0 → Energy bow released
Reserved	(4 bit)	for future use

If ORG = 6 (Telegram from a 1 Byte STM sensor):

DATA_BYTE2..0 always = 0
DATA_BYTE3 Sensor data byte.

If ORG = 7 (Telegram from a 4 Byte STM sensor):

DATA_BYTE3 Value of third sensor analog input (AD_2)
DATA_BYTE2 Value of second sensor analog input (AD_1)
DATA_BYTE1 Value of first sensor analog input (AD_0)
DATA_BYTE0 Sensor digital inputs as follows:

7				0
Reserved	**DI_3**	**DI_2**	**DI_1**	**DI_0**

If ORG = 8 (Telegram from a CTM module set into HRC operation):

DATA_BYTE2..0 always = 0
DATA_BYTE3 as follows:

7				0
RID	**UD**	**PR**	**SR**	**Reserved**

RID	(2 bit)	Rocker ID, from left (A) to right (D): 0, 1, 2 and 3
UD	(1 bit)	UD=1 → O-button, UD=0 → I-button
PR	(1 bit)	PR=1 → Button pushed, PR=0 → Button released
SR	(1 bit)	SR=1 → Store, SR=0 → Recall (see note)
Reserved	(3 bit)	for future use

Note: The bit SR is used only when the lower 3 Bits from ID_BYTE0 = B'111' (scene switch), and RID ≠ 0 (indicates that the memory buttons M0-M5 are operated in the handheld remote control).

2.6 Learning Modes

Four different learning modes are implemented within the RCM 110 and the RCM 120 modules:

1.) **Learning Mode CLR**: ID Memory Reset. All learned transmitter IDs are deleted. Learning mode LRN is entered subsequently. CLR mode has to be entered also for changing the receiver operating mode (changed connections pattern at pins CODE_2..0 is taken over).

2.) **Learning Mode LRN**: Transmitter Learning Mode entered via LRN pin: The receiver sensitivity is limited to in-room operation, learning of repeater-powered signals is disabled. The telegram of the associated radio transmitter has to be triggered one time at least (pressing the desired switch rocker or triggering a sensor).

3.) **Learning Mode RLM**: Transmitter Learning Mode entered via Configuration Remote Control (CTM module in CRC operating mode) or via Central Unit Interface (TCM): The receiver sensitivity is not limited. Learning of repeater-powered signals is enabled. The transmitters telegrams have to be triggered 3 times within 2 seconds to avoid inadvertent learning. RLM can only be entered within a time of approx. 30 minutes after receiver power up to make a running system safe against sabotage.

4.) **Learning Mode SSLM (RCM 110 only)**: Scene Switch Learning Mode entered via SSLM pin: PTM transmitter modules are learned as scene switches. The receiver sensitivity is limited to in-room operation, learning of repeater powered signals is disabled. All switch rockers will have a fixed function; for learning of the whole switch, only one rocker has to be operated.

Indistinct signal or pin configurations are ignored at all times. Within the learning procedure, the learning mode cannot be changed.

2.7 Learning of Radio Transmitters

Please also draw attention to the notes about learnable transmitters in chapter 2.3 and 2.4 “Operating Modes”. LMI pin is active high during all learning modes.

1.) Setting the receiver to learning mode

- **Via CLR Pin:** Contact to GND longer than t = 2 sec. Learning Mode LRN is entered after clearing transmitter-ID memory.
- **Via LRN Pin:** Contact to GND longer than t = 0.5 sec. In multi-channel receiver modes, the pin has to be contacted several times until the desired channel number is selected (the number of channels is given by the selected operating mode = Code_2..0 pin configuration).
- **Via Configuration Remote Control**: The remote control must be operated within a distance of max. 0.5 m to the receiver. A specific selection method can be used (multiple pressing of the control pushbutton) when two receivers are very close together and have been set into learning mode at the same time.
- **Via SSLM Pin:** Contact to GND longer than t = 0.5 sec. In multi-channel receiver modes, all channels are selected (scene switch operates all channels).

2.) The receiver will confirm Learning Mode (i.e. via LEDs in parallel to the output pins)

Operating Mode	Learning Mode Confirmation
RCM 110 – Mode 2-4 (Rocker Switch 1, 2 or 4 ch.)	Output of the selected channel is flashing (1 sec. active / 1 sec. inactive)
RCM 110 – Mode 5 (PWM)	Output changes from minimum to maximum PWM ratio alternately (1 sec. 100% / 1 sec. 20%)
RCM 120 – Mode 1 (Pushbutton)	OUT_0 and OUT_1 outputs are flashing alternately (1 sec. on / 1 sec. off)
RCM 120 – Mode 0 (IT Interface)	The OUT_1 output signal is flashing (1 sec. on / 1 sec. off)
RCM 120 – Mode 2 and 6 (Tubular Motor, 1 or 2 ch.)	The outputs of the selected channel are switching alternately (cyclic slat moving: 1 sec. pause / 1 sec. CLOSE active / 1 sec. pause / 1 sec. OPEN active)

3.) By fresh contacting of the LRN pin to GND (or again operating the Configuration Remote Control) the next remaining channel is selected. In one-channel receiver modes or after the last channel, the operating mode is entered again.

The next remaining channel is selected for learning until the last channel is selected; afterwards, Operation Mode is entered again at the next contact (no output is flashing any more and LMI output changes to inactive). The number of channels is given by the selected operating mode = Code_2..0 pin configuration.

4.) Ensure that the associated radio transmitter will be in a distance less than 5 m to the receiver (not necessary within RLM Learn Mode)

In learning modes LRN and SSLM, the sensitivity of the RCM module is limited to in-room operations and learning of repeater powered signals is disabled (to avoid unintentional learning).

5.) Trigger the telegram of the associated radio transmitter within 30 sec. at the latest

- Operate the switch radio transmitter at least once (press I-button or O-button of the rocker that is to be assigned to the selected receiver channel). If Learning Mode was entered via Config Remote Control, operate the button 3 times within 2 sec.
- Or activate the sensor radio transmitter at least once (triggering is done by a movement within the motion sensor area, illumination of a brightness sensor, etc.). EnOcean sensors in general have a separate pushbutton for easy generation of a triggering signal.
- A fresh contacting of the LRN/SSLM pin to GND or a fresh operation of the Config Remote Control: In multi-channel operation modes, the next remaining channel is selected for learning until the last channel is selected; otherwise, Operation Mode is entered again at the next contact (no output is flashing any more and LMI output changes to inactive).
- After approx. 30 seconds of inactivity (no transmitter has been triggered), the receiver switches back from Learning Mode to Operating Mode automatically.

6.) The receiver will confirm the correct learning of transmitter ID code

Operating Mode	Confirmation of transmitter learned
RCM 110 – Mode 2-4 (Rocker Switch 1, 2 or 4 ch.)	The output of the selected channel remains in active state for 4 sec.
RCM 110 – Mode 5 (PWM)	The OUT_0 output remains at 100% PWM ratio for 4 sec.
RCM 120 – Mode 0 (IT Interface)	The OUT_1 learning indication output remains in active state for 4 sec., on the OUT_0 serial interface line a dedicated learning message including ID and type of the learned transmitter is sent.
RCM 120 – Mode 1 (Pushbutton)	OUT_0 output (O-button) remains in active state for 4 sec., after that OUT_1 output (I-button) remains in active state for 4 sec.
RCM 120 – Mode 2 and 6 (Tubular Motor, 1 or 2 ch.)	The outputs of the selected channel remain in active state alternately (4 sec. CLOSE / 1 sec. Pause / 4 sec. OPEN)

7.) Learning of further transmitters

After confirmation, the receiver changes again to readiness for learning. Further transmitters can be learned immediately. If available the next receiver channel can be entered by connecting the LRN pin to GND longer than t = 0.5 sec. A maximum of 30 radio transmitters can be learned (further attempts will be ignored; instead of learning confirmation, operating mode is entered).

8.) Leave learning mode

LRN mode is leaved by entering the operating mode with LRN pin contacting after the last available receiver channel has been called or automatically after 30 seconds of no activity.

2.8 Deleting Radio Transmitters

a) Deletion of one specific transmitter: Use the same procedure as learning the associated transmitter

As transmitter delete confirmation, the corresponding function outputs remain in inactive state for 4 sec. while LMI keeps active. After that, a wrongly deleted transmitter can be learned again immediately.

b) Deletion of all learned transmitters: Connect the CLR pin longer than 2 sec. to GND

All learned transmitters on all channels are deleted at the same time. After this, the receiver enters Learning Mode LRN.

2.9 RCM 110 Scene Selection Control

For storing and recalling light scenes, a Scene Selection Control functionality is implemented within the RCM 110 module (scene memory). In addition to six user-defined scenes (memories M0 to M5), the basic control functions "All lights on" and "All lights off" are given. Scene Selection Control works within all RCM 110 operating modes (Rocker Switch 1 channel, Rocker Switch 2 channel, Rocker Switch 4 channel and Dimming).

Scenes can be stored and recalled by the HRC radio telegram (ORG = 8) that is generated by a TCM 120 module or a CTM Handheld Remote Control. In addition, scenes can be recalled by PTM modules (have to be learned through Scene Switch Learning Mode SSLM).

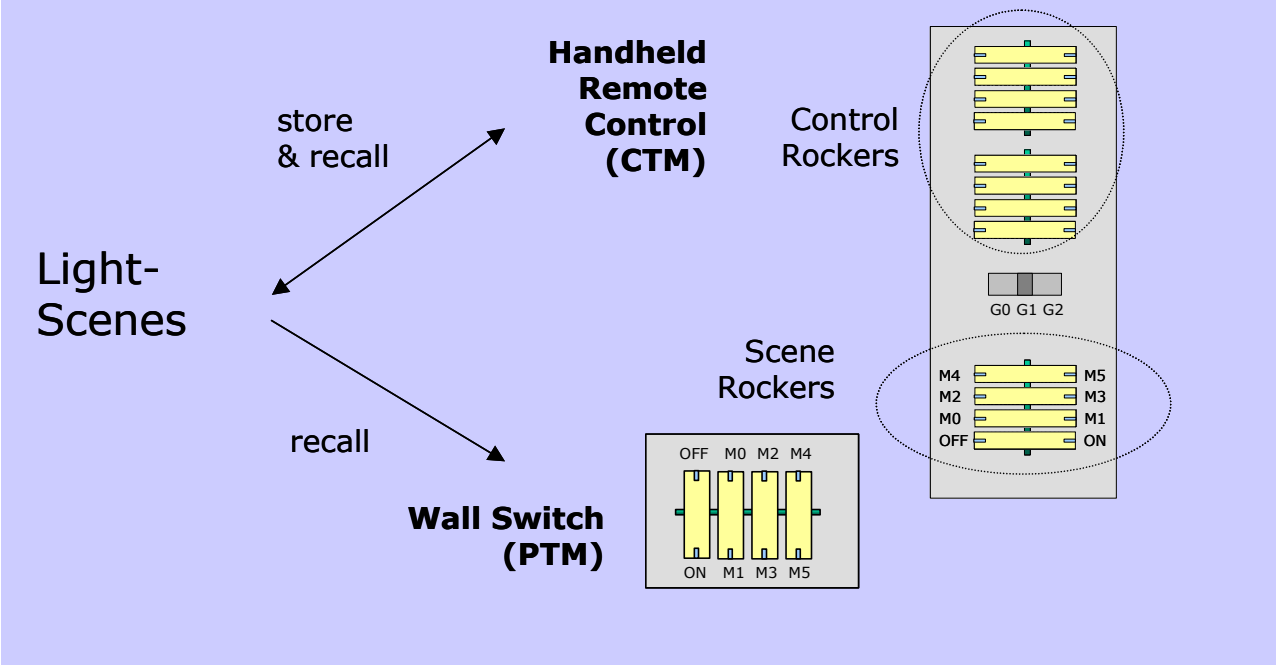

Figure 10: Principle of RCM 110 Scene Selection Control

Learning the Handheld Remote Control (Learning Mode LRN):

1.) Set the receiver to Learning Mode B (LRN pin).

2.) Learn the appropriate Control Rockers (one or more).

3.) Leave Learning Mode (LRN pin).

The Scene Rockers are assigned automatically. Control Rockers will operate only the appropriate receiver channel. Scene Rockers will operate all receiver channels.

Learning PTM transmitters as Scene Switches (Learning Mode SSLM):

1.) Set the receiver to Learning Mode D (SSLM pin).

2.) Learn one rocker of each PTM module; the other rockers are assigned automatically.

3.) Leave Learning Mode (SSLM pin).

Several PTM transmitters can be learned as Scene Switches. The number is limited by a maximum of total 30 IDs stored in the receiver via all three Learning Modes (number of learned control rockers plus learned scene switch modules). PTM modules can be taught to recall scenes only, storing must be done via the CTM module.

2.10 Received Signal Strength Indicator (RSSI)

The RSSI output of the RCM module is useful for transmission range tests. By indicating the strength of an incoming RF signal, this output allows the assessment of RF link quality and transmission range. The RSSI pin output voltage is typically 0.9 V with no RF signal, rising to typically 2.6 V at maximum signal. The external loading should be kept to a minimum since the RSSI output source impedance is around 20 kOhm. The following shows a typical RSSI characteristic:

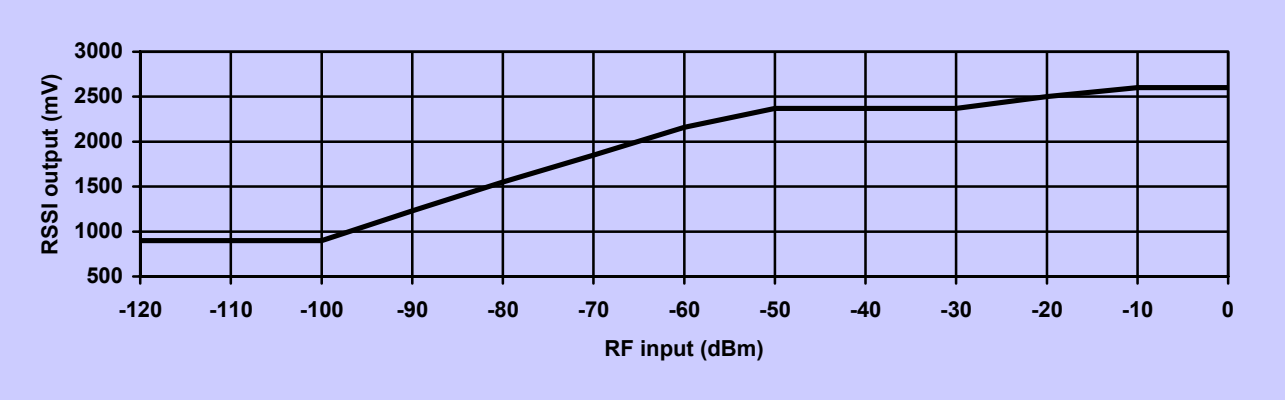

Figure 11: RSSI output characteristics

2.11 Demodulated Direct Signal Output (RxD)

TTL output of all received radio signals (120 KHz, physical layer 1). **This output is not recommended for user's further data processing, because a very complex data structure has to be processed at high speed.** Please note that RCM 120 in Operating Mode 0 offers a 9.6 kbps standardized serial output of all received EnOcean radio telegrams (see chapter 2.5).

3. APPLICATIONS INFORMATION

3.1 Module Mounting

The modules may be mounted in vertical or horizontal position to the user board of the application device (load module). In a vertical position, the module pins can be directly connected to the user board through suitable PCB holes. **Optionally suitable female strip connectors can be used, available e.g. from Conrad Electronic GmbH (Ordering No. 73 92 43).** Additional module fixing may be necessary in rough environments.

The following features have to be available on the motherboard:

- Load circuit, i.e. power switches or serial interface driver (connected to RCM functional output pins OUT_0..3)
- Power supply for the receiver module (GND_0, GND_1, VCC) and for the load circuit
- Configuration of the receiver firmware (connecting of input pins CODE_0, CODE_1 and CODE_2)
- If needed, programming pushbuttons for channel storing (connecting of input pins LRN, SSLM and CLR if used)
- If needed, Learn Mode indication circuitry: LED(s) for providing optical feedback and/or a load output decoupling logic
- External connectors

3.2 Antenna Mounting

Positioning and choice of receiver and transmitter antennas are the most important factors in determining system transmission range. The RCM 110 and RCM 120 receiver modules are supplied with a soldered whip antenna as a standard. This antenna enables a very compact receiver unit with good radio reception characteristics. For mounting the antenna, the following notes should be considered to optimize the system performance:

a) Mounting the soldered 1/4-wave whip antenna:
For good receiver performance, great care must be taken about the space immediately around the antenna since this has a strong influence on screening and detuning the antenna. The antenna should be drawn out as far as possible and must never be cut off. Mainly the far end of the wire should be mounted as far away as possible from all metal parts, PCB strip lines and fast logic components (e.g. microprocessors). To avoid radio frequency noise from the motherboard, which desensitizes the receiver, PCB strip lines on the user board should be designed as short as possible, and using PCB ground plane layer is also recommended.
Note that 868 MHz whip antennas do not show any directional effects under free-field radio-wave propagation conditions (spot-wise radiator). The RSSI voltage output can be used for evaluating the influence of intuitive RF optimizations.
For a good antenna performance don't roll up or twist the whip and please draw attention to an overall whip distance of at least 10 mm (20 mm is better) from any PCB strip, ground plane and conductive part or electric part.

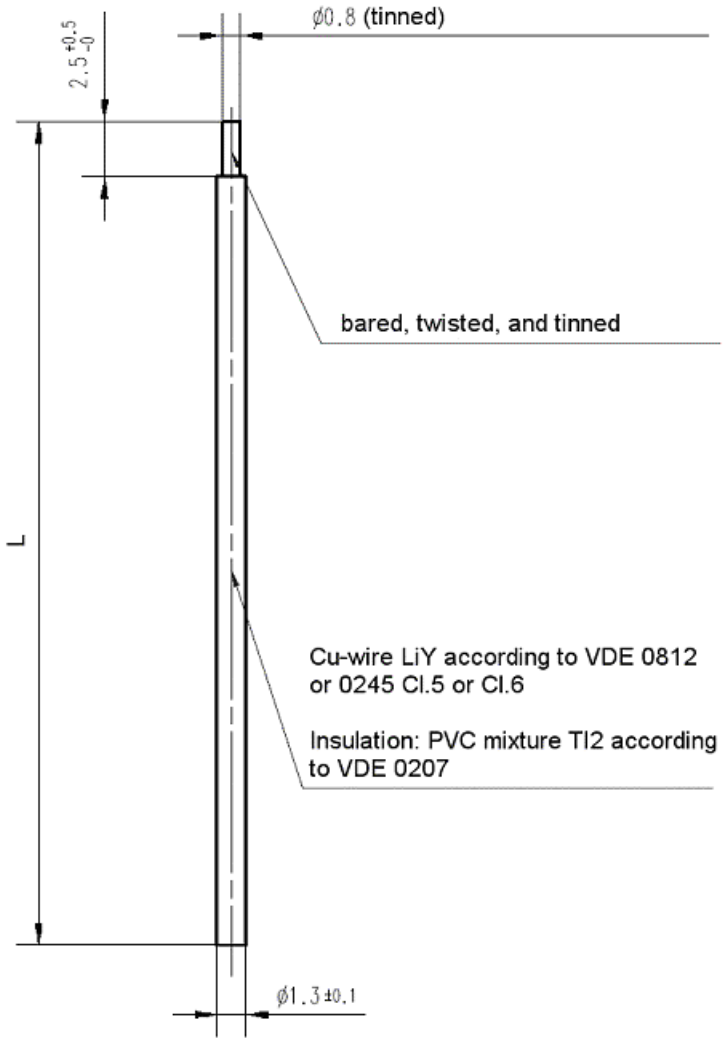

Figure 13: Specification of the RCM whip antenna (L=86 ± 2 mm, color blue)

b) Mounting an external antenna:

For mounting the receiver at bad RF locations (e.g. within a metal cabinet), an external antenna has to be used. After resoldering the pre-installed whip antenna, the external antenna can be connected to the equipment by a 50-Ohm coax feeder with Teflon insulation as follows (connect the inner cable to the resoldered hole, and solder the shielding as short as possible to the RCM Groundplane, length of insulation max. 4 mm):

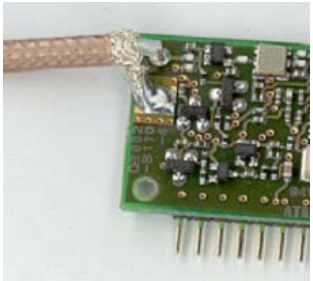

Figure 14: Mounting an external antenna

3.3 Transmission Range

The main factors that influence the system transmission range are type and location of the antennas of the receiver and the transmitter, type of terrain and degree of obstruction of the link path, sources of interference affecting the receiver, and "Dead" spots caused by signal reflections from nearby conductive objects. Since the expected transmission range strongly depends on this system conditions, range tests should categorically be performed before notification of a particular range that will be attainable by a certain application.

The following figures for expected transmission range are considered by using a PTM, a STM or a TCM radio transmitter device and the RCM or the TCM radio receiver device with preinstalled whip antenna and may be used as a rough guide only:

- ***Line-of-sight connections:*** Typically 30m range in corridors, up to 100m in halls
- ***Plasterboard walls / dry wood:*** Typically 30m range, through max. 5 walls
- ***Brick walls / aerated concrete:*** Typically 20m range, through max. 3 walls
- ***Ferroconcrete walls / ceilings:*** Typically 10m range, through max. 1 ceiling
- ***Fire-safety walls, elevator shafts, staircases and supply areas should be considered as screening***.

The angle at which the transmitted signal hits the wall is very important. The effective wall thickness – and with it the signal attenuation – varies according to this angle. Signals should be transmitted as directly as possible through the wall. Wall niches should be avoided. Other factors restricting transmission range:

- **Switch mounted on metal surfaces (up to 30% loss of transmission range)**
- **Hollow lightweight walls filled with insulating wool on metal foil**
- **False ceilings with panels of metal or carbon fiber**
- **Lead glass or glass with metal coating, steel furniture**

The distance between EnOcean receivers and other transmitting devices such as computers, audio and video equipment that also emit high-frequency signals should be at least 0.5m

A summarized application note to determine the transmission range within buildings are available as download from www.enocean.com.

Attention for US applications: Please note that 868 MHz is used in the United States of America by trunk radio also. A decrease of transmitter range should be considered, mainly near to radio beacons of fire brigades.

3.4 Power Supply Requirements

In order to provide a good radio performance, a great attention must also be paid to the power supply and a correct layout and shielding, especially when this power supply also supplies possible sources of interference like oscillators or other digital circuits at the same time. Digital switching is very fast and creates high frequency interferences.
A star-connected topology and at least a 10uF low-ESR tantalum or similar ceramic capacitor is recommended to be added as close as possible to module, between the module supply pin Vcc and GND, together with a low DC-resistance (<1 Ω) EMI-suppressor, like a ferrit bead e.g. multi layer suppressor type MLS0805-4S7-102 from Ferroxcube, series feed between the board supply pin input and the output of the power supply rail.
The ripple on the 5V (±5%) power supply rail should be below 10mVp-p.

3.5 LMI Output Connection

Example of a learning status indication by LEDs at 2 channels mode with decoupled loads during learning mode (the decoupling of the load is only necessary if status indication through connected actors is not appropriate). Note: LMI is Active High during learning mode; OUT_0 and OUT_1 are open collector outputs (Active Low).

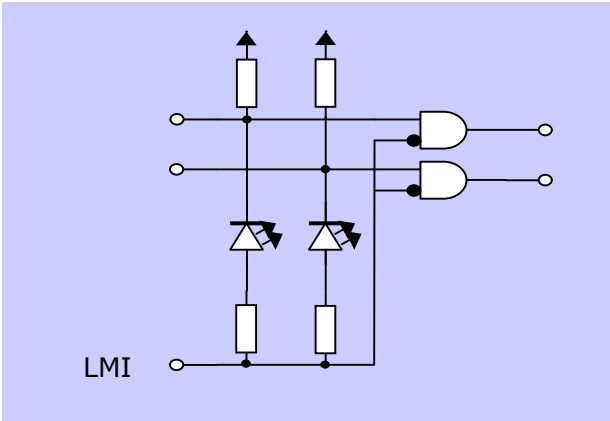

Figure 15: Example of LMI output connection

3.6 Note to RCM 110 Mode 5 (Dimming)

The following figure shows a simple circuit to drive a 1-10V Electronic Control Gear (ECG). Depending on the load, a suitable output buffer has to be added. Using OUT_1 the ECG can be switched off.

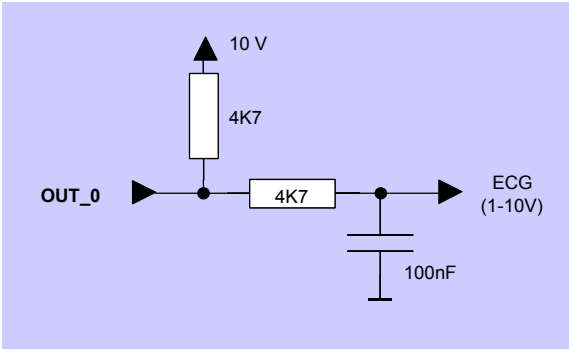

Figure 16: Schematics for driving an ECG

3.7 Notes to RCM 120 Mode 0 (Serial Data Communication)

The Mode 0 serial port enables standard asynchronous communication between the RCM 120 module and a microcontroller or personal computer (9600 bps, 1 start bit, 8 bit data byte with LSB first, 1 stop bit).

For a complete sensor message, a telegram of 14 data bytes is transferred. Since there is no minimum delay time between two messages, **a verification of the two initial synchronization bytes and the final checksum byte is recommended** for synchronizing the first message. It can happen that the data bytes have sync byte format. In this case, a checksum error will occur and the next correct sync byte sequence has to be awaited.

Note that sensor RF telegrams arriving during the serial transmission time (12 ms max.) are ignored by the Mode 0 standard serial output.

Notes for the realization of an own physical RS 232 interface: Only a suited voltage level converter has to be connected to the module output. Because the module output is open collector, an adequate external resistor must be generally added as pull-up to power supply. The integrated component MAX 232 as an example generates the specified serial interface voltage levels from the 5 V power supply of the RCM 120. Further details can be found in the circuit diagram of the EVA 100 user manual and below in chapter 3.11.

3.8 Time-Out Recommendation concerning RCM 120 Mode 1 (Pushbutton)

Radio modules of EnOcean have been developed for highest transmission reliability. Nevertheless it can happen that the radio connection will be disturbed for a short time in cause of physical circumstances and a release telegram of the switching module PTM 100 will not be received.

In cause of that circumstance it is recommended to implement a Watchdog timer if needed. This timer can be easily realized for example by a monostable flip-flop with sufficient time constant that is connected between the RCM output and the power driver.

3.9 CE Approval Requirements

The modules bear the EC conformity marking CE and conforms to the R&TTE EU-directive on radio equipment. The assembly conforms to the European and national requirements of electromagnetic compatibility. The conformity has been proven and the according documentation has been deposited at EnOcean. **The RCM modules can be operated without notification and free of charge in the area of the European Union, in Switzerland, in Cyprus, in Czech, in Estonia, in Hungary, in Latvia, in Lithuania, in Malta, in Poland, in Romania and in Slovenia**. The following provisos apply:

- EnOcean RF modules must not be modified or used outside their specification limits.
- EnOcean RF modules may only be used to transfer digital or digitized data. Analog speech and/or music are not permitted.
- The final product incorporating EnOcean RF modules must itself meet the essential requirement of the R&TTE Directive and a CE marking must be affixed on the final product and on the sales packaging each. Operating instructions containing a Declaration of Conformity has to be attached.
- If transmitters are used according to the regulations of the 868.3 MHz band, a so-called "Duty Cycle" of 1% per hour for each transmitter must not be exceeded.

3.10 FCC/IC Approval Requirements

Because of the very low radiated field strength on average, the 868.3 MHz EnOcean radio technology can be approved in the USA and in Canada.

In the US approval of receivers is <u>not</u> necessary in general. On a voluntary base an US representative can last out a "Declaration of Conformity" (DOC) together with technical documentation. The measurements has to be done by a FCC notified body with respect to FCC Part 15B. Product labeling should be according Part 15 of the FCC Rules, page 11.

In Canada receivers < 960 MHz must be approved! The measurements of the finished device has to be done by a IC notified laboratory with respect to RSS-210 of Industry Canada, section 7. The receiver has to be labeled with IC approval number.

Please note: 868 MHz frequency range is used by Trunk Radio in the US. Since a reduction of transmission range is to be expected near to a trunk radio station, range tests at the system's target location should categorically be performed before notification of a particular range in the US and Canada!

3.11 Connecting Open Collector Outputs

The term open-collector typically refers to a transistor output where the collector (output) of the transistor is not yet connected to a positive voltage internally. Since a transistor used in an output is typically a saturated switch, the collector needs to be connected to a positive voltage to complete the circuit. This positive voltage does not need to be any specific value as

long as it is above the transistor saturation level. Therefore, an open collector output offers more flexibility and can be connected to a broad range of voltages using an adequate pull-up resistor. This resistor is required for the output as it completes the transistor's circuit.

Applications of open-collector devices:

One useful property is that the resistor does not need to be connected to the same supply voltage Vcc: a lower or higher voltage can be used instead. Open collector circuits are therefore sometimes used to interface two devices that have different operating logic levels (voltages.) or even to direct drive of higher voltage working external loads (e.g. relays).

Another advantage is that more than one open-collector output can be attached to a single wire. If all outputs attached to the wire are in the high-impedance/logic 1 state, the pull-up resistor will hold the wire in a high voltage state. If at least one of the device outputs is in the ground/logic 0 state, it will sink current and bring the line voltage low.
By tying the output of several open collectors together, the common line becomes a "wired AND" gate: that is, it behaves like the boolean AND of the two (or more) input gates in that it will be logic 1 whenever both (all) gates are in the high impedance state, and 0 otherwise.

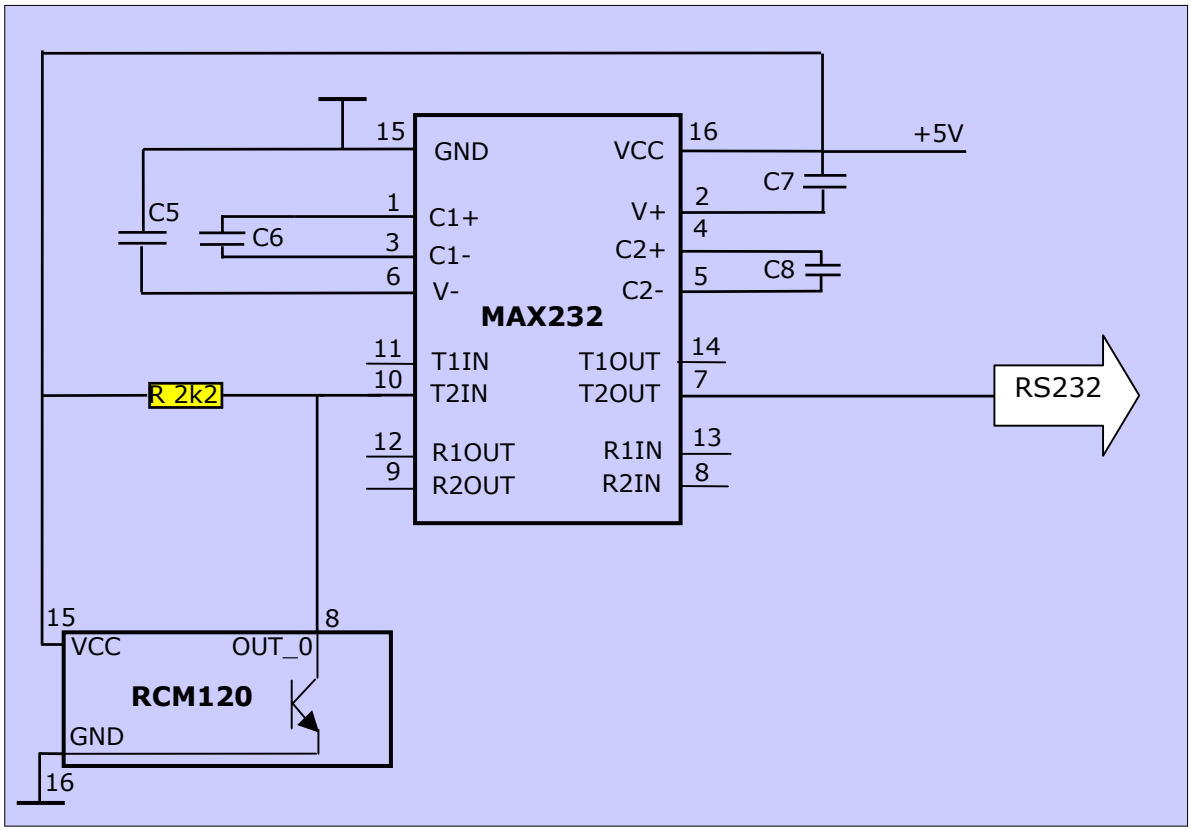

Figure 17: Typical example for external connection of an RCM120 open collector output

As already specified, the outputs of the RCM (OUT_X) are all open collector. Some recommended RS232 integrated circuits such as MAX232 have integrated pull-up input resistors (e.g. 400k or higher), but some others types have integrated pull-down resistors!

As consequence, an adequate external pull-up resistor (e.g. here 2k2) shall be connected between the used open collector (output signal) and desired supply voltage, (e.g. the same +5V supply), particularly in doubt.

4. DEVELOPMENT TOOLS

4.1 Evaluation Kit EVA 100/105

EVA 100 is an evaluation kit to support the development of applications based on the EnOcean receiver modules RCM 110 and RCM 120. EVA 100 supports a quick evaluation of all receiver operation modes as well as a quite easy setting-up operation of the receiver side when EnOcean transmitter modules (e.g. PTM 100 or STM 100) are evaluated.

Type	EnOcean Ordering Code	Scope of supply
EVA 100	**H3004-G100**	• Evaluation board EVA-PCB • EnOcean radio devices STM 100, PTM 100, RCM 110 and RCM 120 • CD with RS232 PC-link monitor software and detailed kit documentation • 230V wall power supply for EVA-PCB • Convenient equipment case
EVA 105	**H3004-G105**	• US version (120V wall power supply)

4.2 Field Intensity Meter EPM 100

The EPM100 is a mobile field-intensity meter that helps the engineer to find the best installation positions for sensor and receiver. It can also be used to check disturbances in links to already installed equipment. The EPM100 displays the field intensity of received radio telegrams and interfering radio signals in the 868MHz range.

The simplest procedure for determining the best installation positions for the radio sensor/receiver:

- Person 1 operates the radio sensor and generates pushbutton radio telegrams.
- Person 2 checks the received field intensity on the meter display to find the optimal installation position.

5. DECLARATION OF CE CONFORMITY

EnOcean GmbH
Kolpingring 18a
D 82041 Oberhaching
www.enocean.com

Declaration of Conformity

CE

We:	**EnOcean GmbH** **Kolpingring 18a** **D 82041 Oberhaching** **Germany**
Declare:	**under our sole responsibility that the following labeled products:**
	Transmitter: **PTM100, STM100, STM250, PTM200**
	Receiver: **RCM110, RCM120, RCM121**
	Transceiver: **TCM110, TCM120**
	to which this declaration relates, are, when used according to specification, in conformity with the technical requirements of the standards and the provisions of the essential requirements of the Directives detailed below.
Directives:	**Electromagnetic Compatibility Directive 89/336/EC**
	Radio and Telecommunications Terminal Equipment Directive R&TTE 1999/5/EC
Standards:	**ETSI EN 301 489-1: 2001-09, ETSI EN 301 489-3: 2001-11 (class 2)**
	ETSI EN 61000-6-2: 2002-08
	ETSI EN 300 220-3: 2000-09

Place of issue: Oberhaching
Quality Manager:
Dr. Matthias Heiden
Signature:

Date of issue: 13. May 2005
General Manager:
Markus Brehler
Signature: